Visite la página TRAXXAS.com/manuals para descargar el instructiones en su idioma.

Auf TRAXXAS.com/manuals können Sie anleitung in Ihrer Sprache downloaden.

Low-CG Chassis Conversion Instructions

Covers Part #5830

CHASSIS COMPONENT INSTALLATION

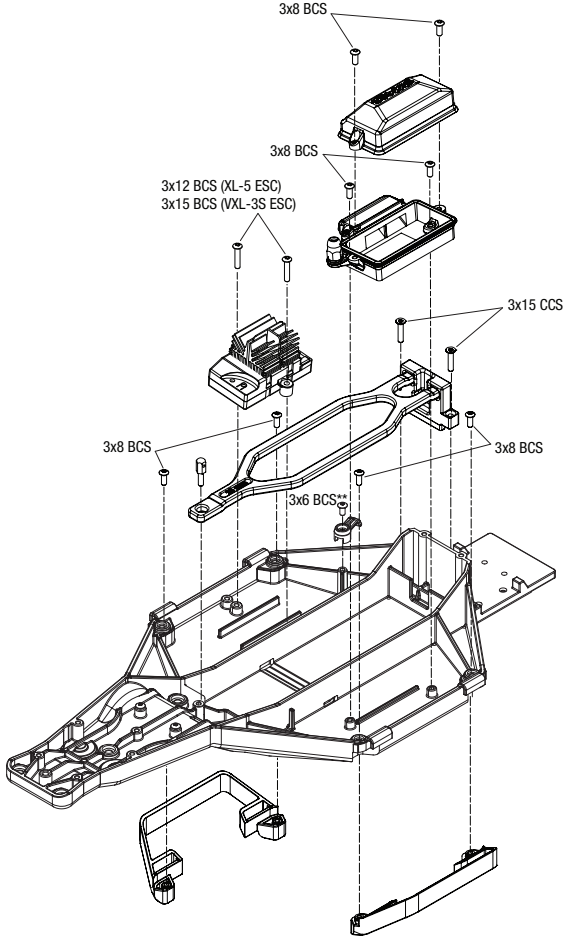

VEHICLE ASSEMBLY

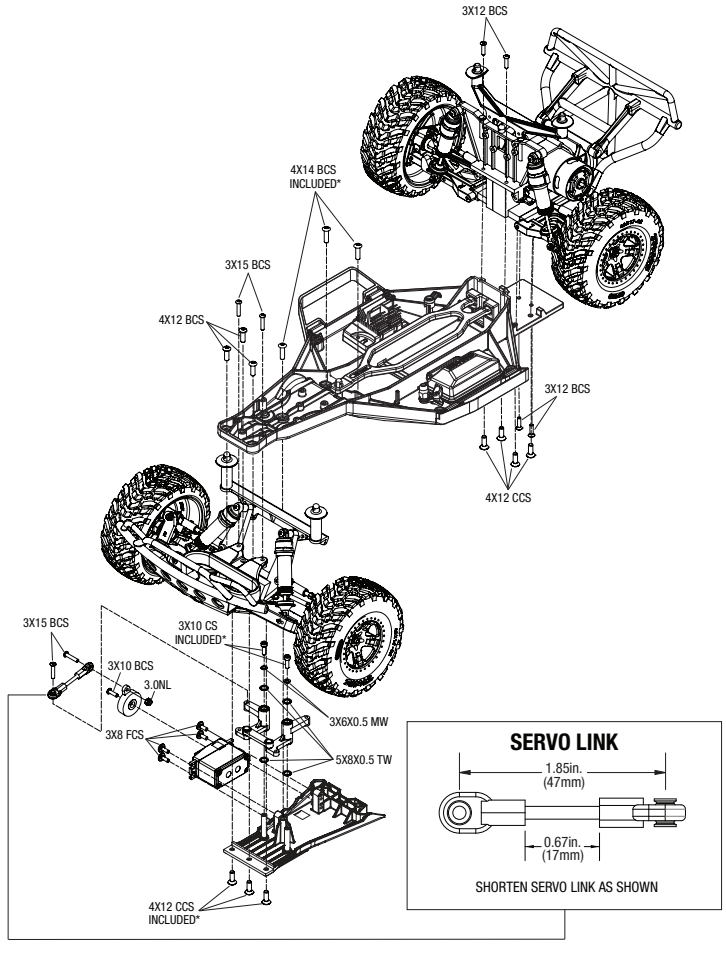

SERVO MOUNTING POSITIONS

HIGHER POSITION

FOR VEHICLES WITH SERVO-MOUNTED SERVO SAVERS

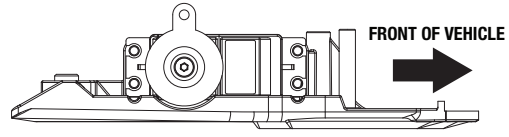

LOWER POSITION

FOR VEHICLES WITH BELLCRANK-MOUNTED SERVO SAVERS

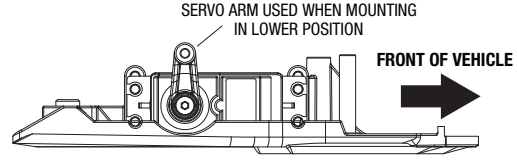

Reversing the direction of the steering servo (TQi transmitter):

1. Press and hold MENU. Green LED blinks.
2. Press MENU. Green LED blinks 2 times.
3. Press SET. Green LED blinks.
4. Press SET. Red LED blinks.
5. Press SET to reverse servo direction. Green LED blinks 8 times.
6. Press and hold MENU.

Reversing the direction of the steering servo (TQ 2.4GHz transmitter):

1. Press and hold SET. Green LED blinks.
2. Turn steering wheel to full left or full right.
3. Hold steering wheel in position.
4. Press SET to reverse servo direction.

*Use existing fasteners except where indicated as INCLUDED

**VXL equipped models only

Traxxas, 6200 Traxxas Way, McKinney, TX 75070, Phone: 972-265-8000, Fax: 972-265-8011, e-mail: support@Traxxas.com

KC1886-R00 130927